VERTICO

WORKSHOP 2 by ENCOMPASS

WWW.ENCOMPASSSIGN.COM/SYSTEMS
1-855-672-2201 • info@encompasssign.com
©2016 Encompass Sign Systems
For the most recent version of this document, please visit our website

VERTICO

PROFILES

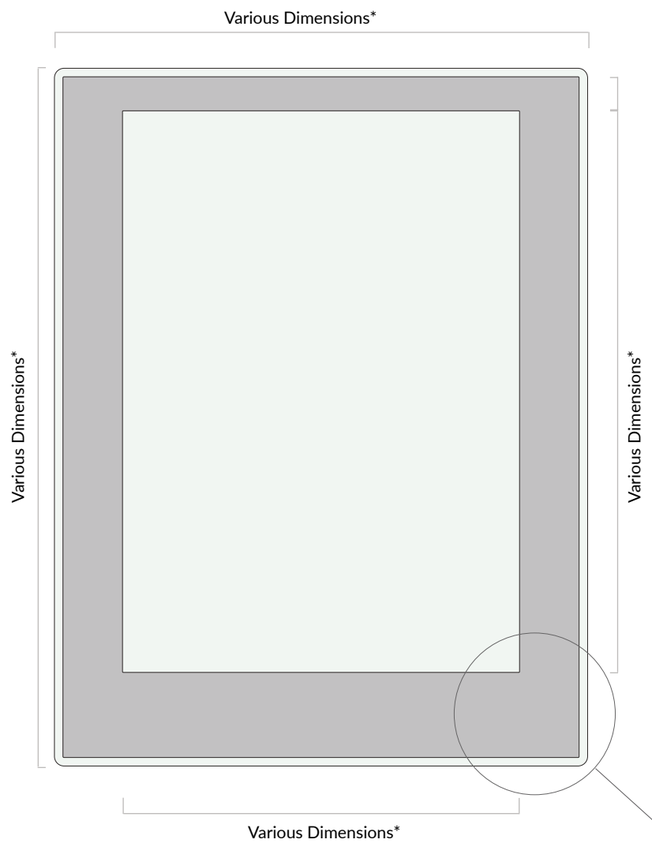

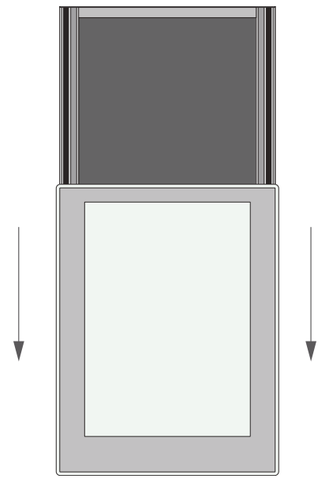

Vertico case slides downwards to open and is held in position by a counter balance spring system.

When in the fully closed position, Vertico is locked by a concealed latch located in the bottom left hand corner.

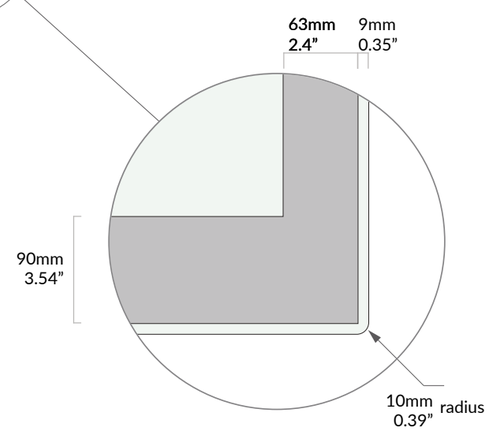

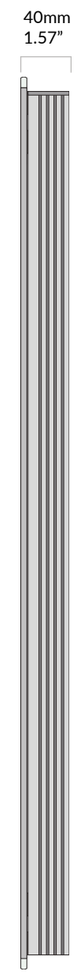

SYSTEM	PRODUCT	INSERT SIZE	FRAME SIZE
		h x w	h x w
VERTICO	*Imperial Portrait*		
	A3	16.53 x 11.69 in	22.2 x 17.36 in
	A2	23.38 x 16.53 in	29.05 x 22.2 in
	A1	33.11 x 23.38 in	38.77 x 29.05 in
	Imperial Landscape		
	A3	11.69 x 16.53 in	17.36 x 22.2 in
	A2	16.53 x 23.38 in	22.2 x 29.05 in
	A1	23.38 x 33.11 in	29.05 x 38.78 in
	A0	33.11 x 46.81 in	38.78 x 52.48 in
	Metric Portrait		
	A3	420 x 297 mm	564 x 441 mm
	A2	594 x 420 mm	738 x 564 mm
	A1	841 x 594 mm	985 x 738 mm
	Metric Landscape		
	A3	297 x 420 mm	441 x 564 mm
	A2	420 x 594 mm	564 x 738 mm
	A1	594 x 841 mm	738 x 985 mm
	A0	841 x 1189 mm	985 x 1333 mm

**Standard Sizes listed above, Custom Sizes can be made upon request*

VERTICO

Vertico's frameless design allows an edge-to-edge glass face with a 0.4 in. clear glass margin around the perimeter.
As a safety measure, the glass face has radius corners. Vertico has an elegant, fluted side casing that holds the sliding mechanism. Vertico has no visible fixings. Vertico also uses a unique and proprietary sliding mechanism to open and close. This allows posters and notices to be displayed or changed safely in busy circulation spaces.

Vertico can be illuminated using LED 'maintenance free' technology. LED lamps should last many times longer than conventional uorescent lamps. LEDs have a running cost of around 20% of conventional lamps.

Vertico is suitable for all internal environments where temporary signs need to be displayed; corporate reception areas, conference centers, hotel lobbies, restaurants, showrooms, museums and galleries, schools, universities and libraries and retail environments.

©2016 Encompass Sign Systems